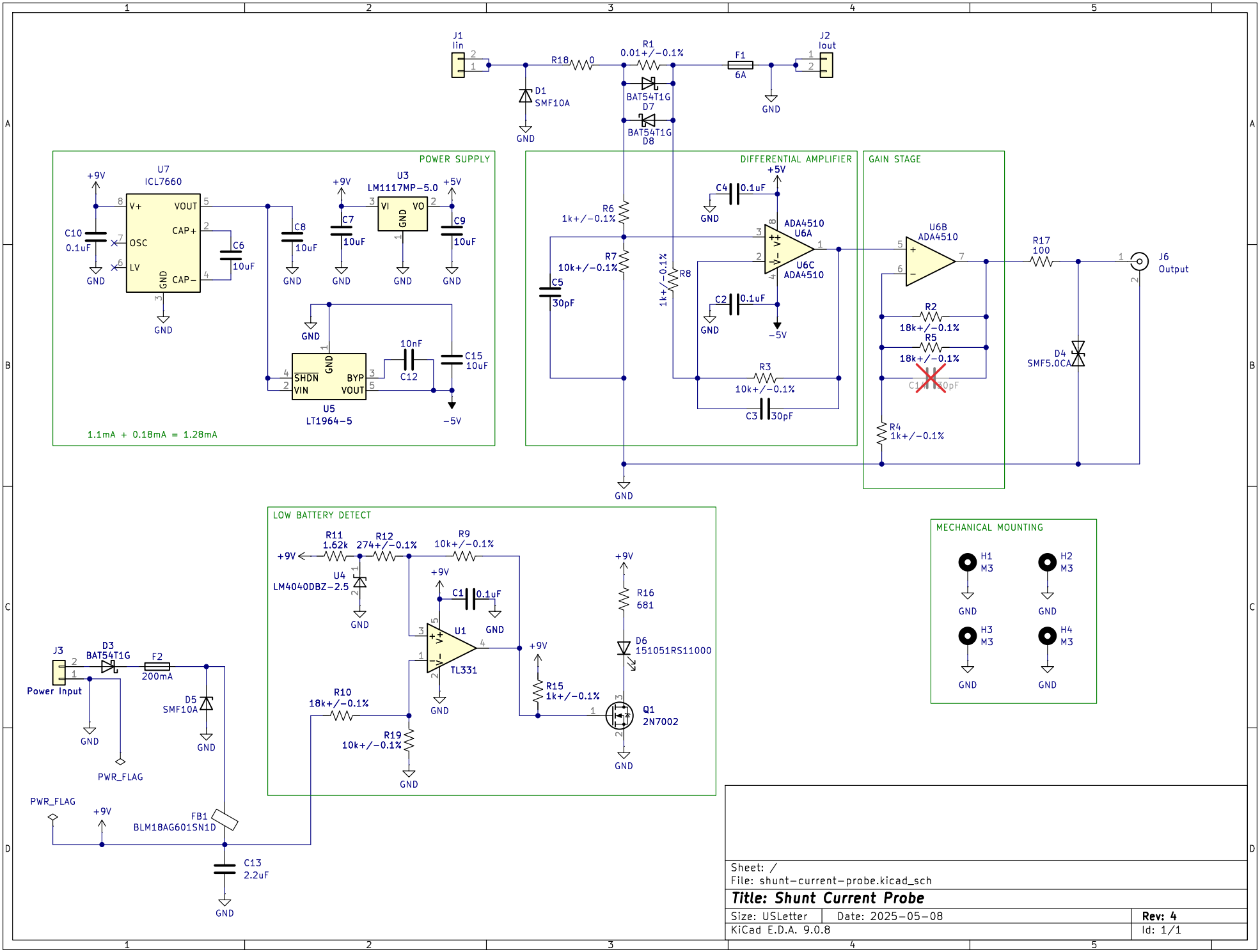

Sheet: /
File: shunt−current−probe.kicad_sch

Title: Shunt Current Probe

Size: USLetter	Date: 2025−05−08	Rev: 4
KiCad E.D.A. 9.0.8		Id: 1/1